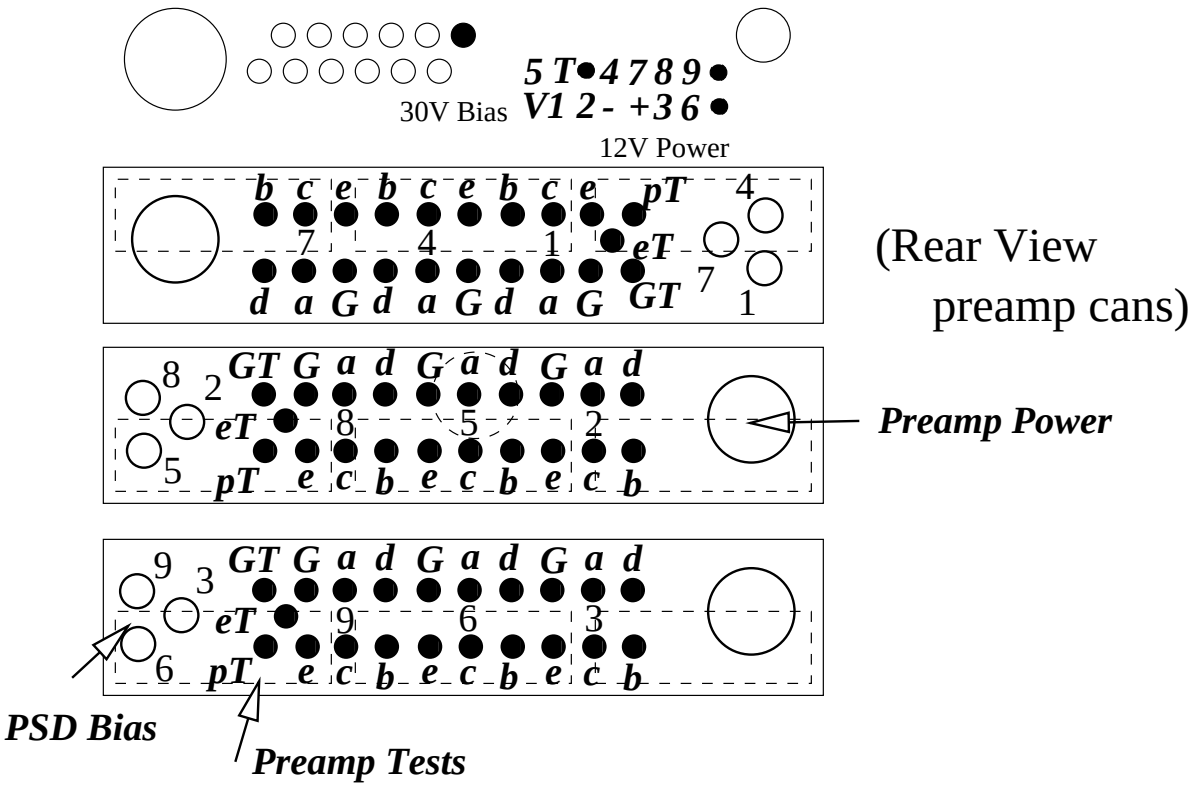
5 T 4 7 8 9
V1 2 - +3 6
30V Bias
12V Power
b c e b c e b c e pT 4
7 4 1 eT
d a G d a G d a G GT 7 1
(Rear View
preamp cans)
8 2
GT G a d G a d G a d
eT 8 5 2
5 pT e c b e c b e c b
Preamp Power
9 3
GT G a d G a d G a d
eT 9 6 3
6 pT e c b e c b e c b
PSD Bias
Preamp Tests